Valve Replacements and Wet Well Access Improvements at Slater Pump Station, Project No. FRC-0017

Presented by:
Valerie Ratto
Engineering Supervisor

Construction Contract Award

Operations Committee
June 3, 2026

OC SAN
ORANGE COUNTY SANITATION DISTRICT

1

Project Location: Huntington Beach

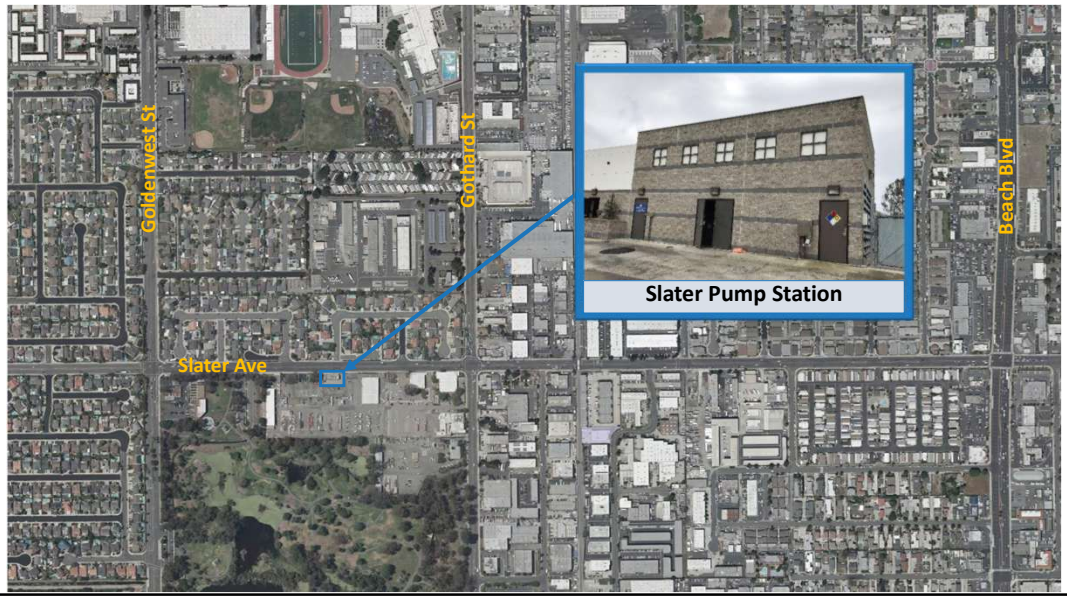

2

2

Pump Station Layout

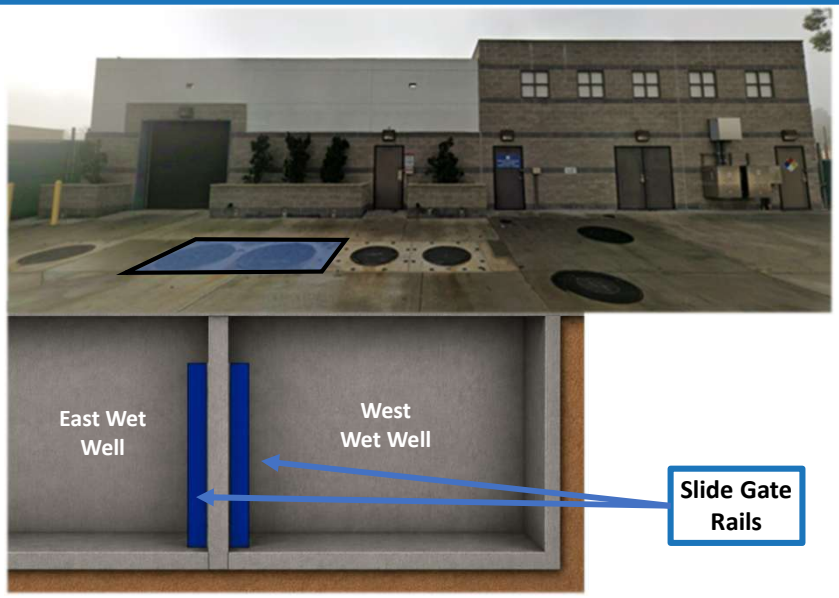

3

3

Wet Well Improvement – Manholes

- Replace existing manhole covers with rectangular hatch covers

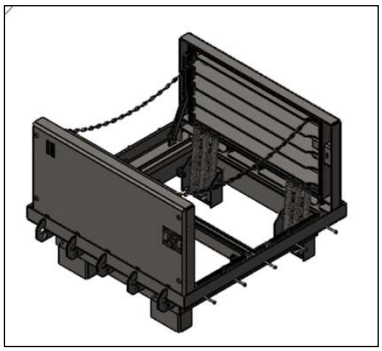

4

4

Wet Well Improvement – Slide Gate & Guides

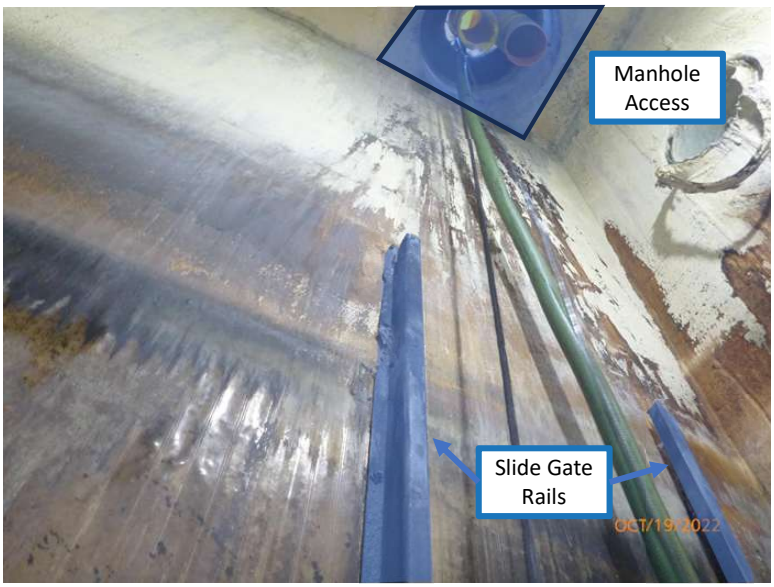

- Replace East and West slide gate rails and gates
- Repair PVC liner

5

5

Dry Well – Valve Replacements

(5) 16” Check Valves

(3) 6” Plug Valves

6

6

Bid Results

Engineer's Estimate **$2,700,000**

Bidder	Amount of Bid
Steve P. Rados, Inc.	$2,624,000
Downstream Services, Inc.	$2,713,472
Environmental Construction, Inc.	$2,720,943
Vicon Enterprise, Inc.	$2,770,277
Innovative Construction Solutions	$4,464,000

7

7

Recommendation

Recommend to the Board of Directors to:

A. Receive and file Bid Tabulation and Recommendation for Valve Replacements and Wet Well Access Improvements at Slater Pump Station, Project No. FRC-0017;

B. Award a Construction Contract Agreement to Steve P. Rados, Inc., for Valve Replacements and Wet Well Access Improvements at Slater Pump Station, Project No. FRC-0017, for a total amount not to exceed $2,624,000; and

C. Approve a contingency of $262,400 (10%).

8

8